Brioso # BR 4110

Mounting instructions

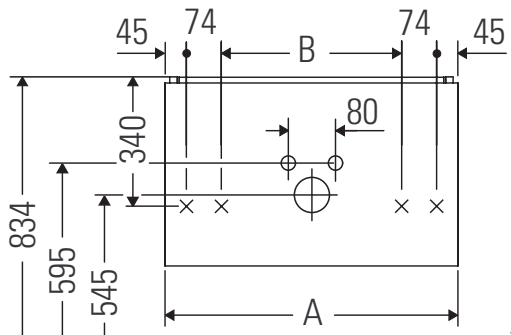

A mm	B mm	W mm	X mm
620	382	16	834

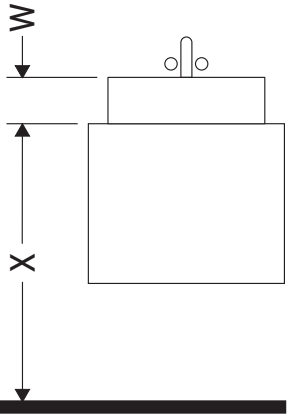

ME by Starck # 234263

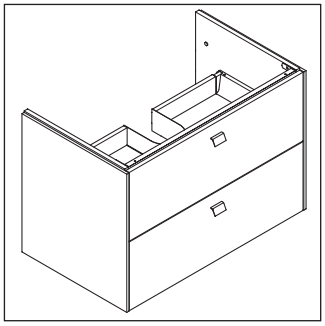

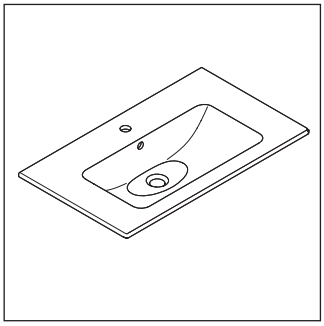

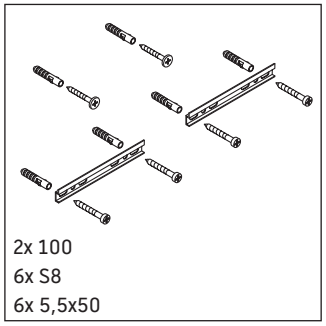

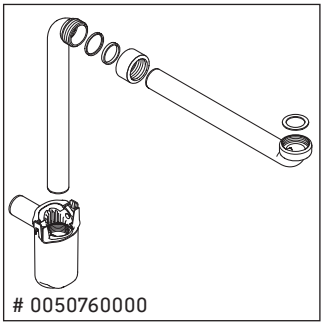

Instructions for use

The bathroom furniture range complies with the standards and guidelines applicable at the time of delivery and is designed for use in bathrooms. Direct contact with water should be avoided, for example, when showering.

We reserve the right to make technical improvements and design modifications to the products illustrated.

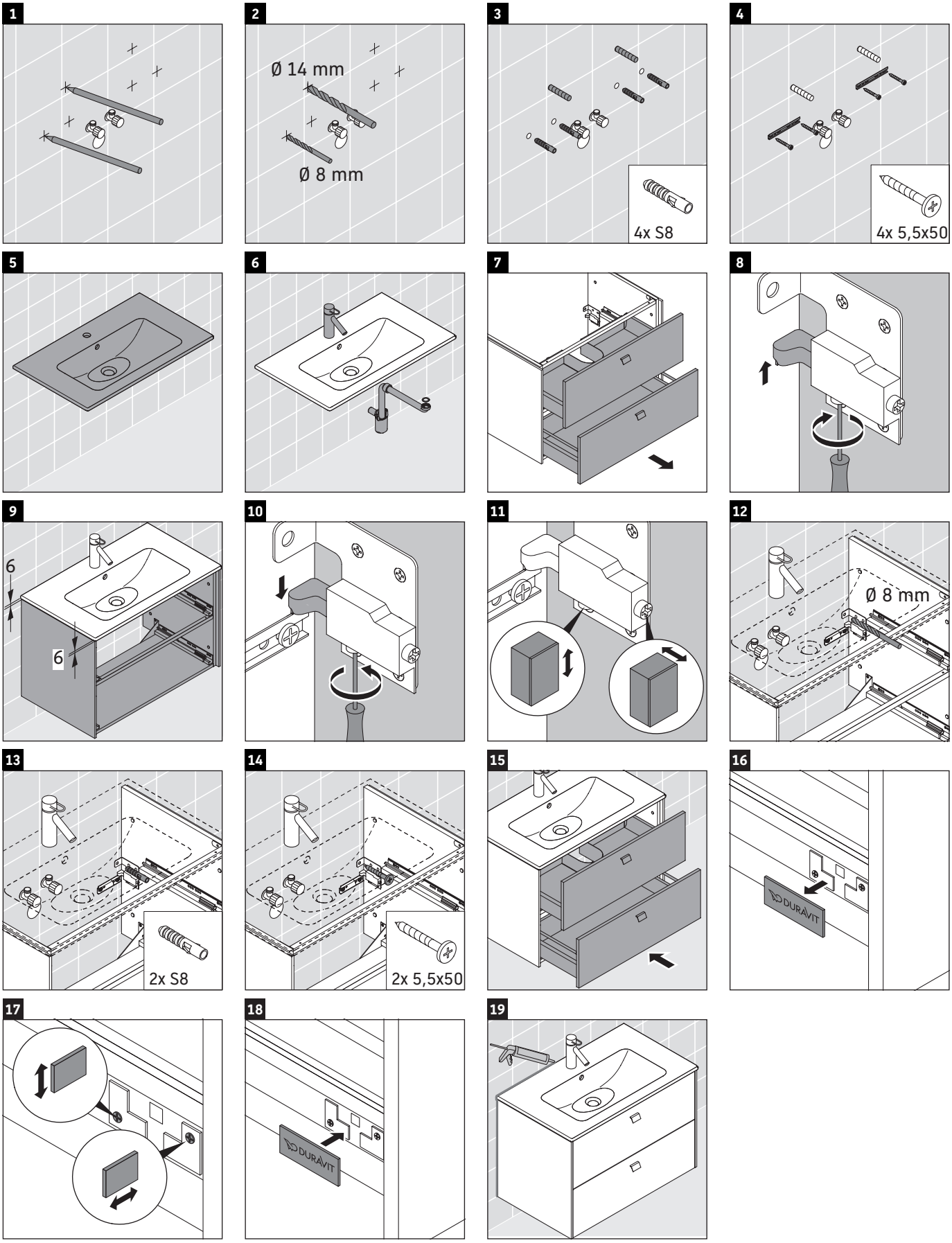

Best.-Nr. BR4110/18.01.1

Duravit AG, Werderstr. 36, 78132 Hornberg, Germany, Phone +49 78 33 700, Fax +49 78 33 70 289, info@duravit.de, www.duravit.de